Helmut Hoelzer's Fully Electronic Analog Computer

JAMES E. TOMAYKO

A fully electronic general-purpose analog computer was designed by Helmut Hoelzer, a German electrical engineer and remote-controlled guidance specialist. He and an assistant built the device in 1941 in Peenemunde, Germany, where they were working as part of Wernher von Braun's long-range rocket development team. The computer was based on an electronic integrator and differentiator conceived by Hoelzer in 1935 and first applied to the guidance system of the A-4 rocket. This computer is significant in the history not only of analog computation but also of the formulation of simulation techniques. It contributed to a system for rocket development that resulted in vehicles capable of reaching the moon.

*Categories and Subject Descriptors: C.1.m [**Processor Architectures**]: Miscellaneous—analog computers; I.6.3 [**Simulation and Modeling**]: Applications; K.2 [**History of Computing**]—hardware, people*
General Terms: Design
Additional Key Words and Phrases: V-2 rocket, W. von Braun, guidance and control

A fully electronic general-purpose analog computer was designed by Helmut Hoelzer, a German electrical engineer and remote-controlled guidance specialist. He and an assistant built the device in 1941 in Peenemunde, Germany, where they were working as part of Wernher von Braun's long-range rocket development team. The computer was used in a variety of simulations and trajectory calculations at Peenemunde and later at Fort Bliss, Texas, when the rocket team and some of its equipment migrated to the United States. This computer is significant not only in the history of analog computation, but as the centerpiece of the growth of the art and science of simulation. It contributed to a system for rocket development that resulted in vehicles capable of reaching the moon. Despite its utility and impact, this machine has received little notice in existing histories of analog computation.

© 1985 by the American Federation of Information Processing Societies, Inc. Permission to copy without fee all or part of this material is granted provided that the copies are not made or distributed for direct commercial advantage, the AFIPS copyright notice and the title of the publication and its date appear, and notice is given that the copying is by permission of the American Federation of Information Processing Societies, Inc. To copy otherwise, or to republish, requires specific permission.
Author's Address: Department of Computer Science, Campus Box 83, Wichita State University, Wichita, KS 67208.
© 1985 AFIPS 0164-1239/85/030227–240$01.00/00

History of Analog Computers

Analog computers calculate by modeling the real world. Whereas digital computers operate on discrete units of data, and input and output are in such units, analog computers accept continuous input and produce continuous output. In that sense, they are faster than digital machines, but they are less flexible in that they do not handle character data, and they are less accurate.

As with digital computers, the history of analog computers falls into a mechanical phase and an electronic phase. The slide rule is often cited as an example of a simple mechanical analog. In the early 1870s, Lord Kelvin built several mechanical integrators (Thomson 1875*a*; 1875*b*). In this century, the most famous general-purpose mechanical analog computer is Vannevar Bush's Differential Analyzer (Bush 1931). The machine filled a large room and was rela-

tively slow, but it had a long life and many applications. Another mechanical differential analyzer of Bush's design was constructed in Oslo in the 1930s by Sven Rosseland (Hirschler 1983; Petzold 1982).

Electrical circuits were first applied to analog computing in the 1920s and 1930s. Appropriately, the first electrical analogs were used in modeling electrical transmission networks. In the 1920s, scale models of large electrical generating systems and their transmission lines were used in the design and maintenance of such networks. More significantly, George A. Philbrick built an Automatic Control Analyzer while he was an engineer at the Foxboro Company in Massachussetts in 1937–1938. This electronic analog computer was limited to simulating a process-control loop. Its more informal name was Polyphemus, after the one-eyed cyclops, because one output device was a single cathode-ray tube (Holst 1971; 1982).

Again in parallel with digital computers, the 1940s is commonly considered the decade in which fully electronic analogs came into being. During World War II, mixed electrical/mechanical analog computers were used in gun directors. Bell Labs did research on them using direct-current (DC) amplifiers. In the Allied nations, work also continued on fully electronic machines that did not come to fruition until after the war. RCA's Typhoon and Reeves Instrument's Cyclone were electronic analog flight simulators developed at that time. In the late 1940s Goodyear's GEDA and Reeves Instrument's REAC were both used in government research and were the forerunners of commercially available electronic analog computers. In most books on analog computation that contain historical surveys, the beginning of electronic analog computation is fixed between 1946 and 1950, with an occasional mention of Philbrick's unpublished work (Jackson 1960; Jenness 1965; Johnson 1963; Roede 1955; Tomovic and Karplus 1962; Weyrick 1969). In only one (Giloi n.d.) is Helmut Hoelzer identified as the designer of a fully electronic general-purpose analog computer that preceded the postwar activity. In a section on the history of computers in general, Giloi follows his description of the ENIAC with a paragraph that begins, "It is interesting to note that the electronic analog computer is even slightly older than the electronic digital computer." Alwin Walther, Hoelzer's dissertation advisor, had informed Giloi of the computer in a personal communication, and Giloi included it in the text.

The story of the origins of Hoelzer's computer, why its existence has remained obscure until this time, and its impact on computing and simulations follows.

Germination of the Concept

The concept that was later to be applied to both the guidance system for the A-4 rocket (commonly known as the V-2) and the general-purpose electronic analog computer originated in 1935. At that time Helmut Hoelzer was a student at the Technical University of Darmstadt. He was also a glider pilot. Irritated because he never knew his velocity relative to the ground, he thought of an idea for a device to measure the absolute velocity of an aircraft—that is, the velocity independent of wind assistance or other outside influences. The acceleration could be measured in three axes with a mass-spring-damping system, thus converting the measurement values into an intrinsic electrical current and sending the current through a condenser. The velocity is obtained by measuring the voltage across the condenser. An "intrinsic" current here means a current that cannot be influenced by voltages developing across impedances in the circuit such as a regulated current or one that comes from a source with very high internal resistance (Hoelzer 1983*b*). The velocity-measuring device functions as a special-purpose analog computer, an electrical network to create a representation of the velocity.

Hoelzer wanted to build this device as a project in his undergraduate curriculum. He discussed it with Kurt Debus, then an assistant professor in the faculty of Electrotechnique (measurement techniques) in the Technical University at Darmstadt, and later director of the Kennedy Space Center. Both Debus and the

James E. Tomayko is an assistant professor of computer science at Wichita State University, teaching software engineering and the history of computing. He holds a B.A. in history from Carnegie-Mellon University, a B.A. in secondary education from the University of Kansas, an M.A. in Chinese from the University of Pittsburgh, and a doctorate in the history of technology from Carnegie-Mellon. Currently he is under contract with NASA to write a book-length history of NASA's use of computers in spaceflight operations. He wrote about the computers on manned spacecraft in the January 1985 Annals.

department head discouraged Hoelzer from trying to build the velocity computer. They said that he did not appreciate the "tremendous difficulties" and costs of the project. Thus Hoelzer was not able to do anything with the idea until coming to Peenemunde in 1939, where long-range rockets were in need of a guidance system.

Figure 1. Helmut Hoelzer while head of the Computation Laboratory of the George C. Marshall Space Flight Center (NASA Photo M61-2808).

First Application: A Computer for the A-4 Guidance System

The A-4 was probably the first rocket truly to "need" an accurate guidance system. Before World War II, most rockets used in scientific work were one-shot, custom-built devices. Their builders were trying to make them achieve height rather than distance and payloads were recovered in a haphazard manner. Mass-produced rockets were solely military in nature (if we exclude fireworks!) and used primarily for bombardment. Before the twentieth century, the Congreve rockets produced in England were probably the most successful in their time (they are famous for having contributed a line to the U.S. national anthem). Refinements in artillery made the Congreve rockets ineffective and expensive by comparison. Research on bombardment rockets revived in World War I, when Robert H. Goddard received some much-needed U.S. research support, but the war ended before operational rockets could be produced.

Between the wars, rocket and "interplanetary" societies flourished in the United States, England, and other countries, their members fervently engaged in dreaming, paper-and-pencil exploring, and occasionally nearly blowing themselves up with homemade rockets. One of the prominent societies was in Germany, where there was a great burst of popularity of rockets and spaceflight during the late 1920s and early 1930s. Hermann Oberth and Willy Ley wrote popular tracts, and Fritz Lang made a film about a moon voyage, *Frau im Mond* (Ordway and Sharpe 1979).

By 1932 the German army decided to enlarge its rocket research program. In October of that year, a brilliant, handsome, and somewhat precocious engineer named Wernher von Braun was hired by Walter Dornberger, who eventually headed the army's rocket research program, with von Braun as the technical director. During the 1930s, they continued research on liquid-propellant rocket engines, first flown by Goddard in 1926. The research was centered on increasing the thrust of such engines, and thus the throw-weight and range of the resulting rocket weapons. This effort was the first application of liquid-propellant rockets to military use. The objective was a very large, accurate delivery vehicle for high explosives with a range rivaling that of a bomber. The eventual result, after much testing and many failures, was the A-4, which terrorized the populations of London and Antwerp in the latter stages of World War II.

Two factors influenced the design of the A-4 guidance system: the requirement for accuracy and the need for mass production. The first factor paced the second, for if accuracy could not be assured, there would be no use in building the rockets. The basic mission profile of the A-4 was to follow a ballistic path to its target. If a line is drawn through points that represent the launch site and the target, two potential types of error in the flight path are evident: error along the line, as in falling short or overshooting the target, and lateral error with respect to the line. The former could be handled by adjusting the cutoff time of the rocket motor or by loading only enough fuel to reach the target at full thrust coupled with a tilting program. These factors essentially controlled the final velocity of the vehicle, and thus its eventual peak altitude and range along the ballistic path. Creating the proper angle of attack during ascent on the ballistic path was the purpose of the attitude-control system. Control of lateral error was to be the job of the rocket's guidance system.

Lateral control was already implemented in aircraft using "beam rider" schemes where a radio beam was directed along the optimum path, and deviations from the path were detected and corrected by a combination

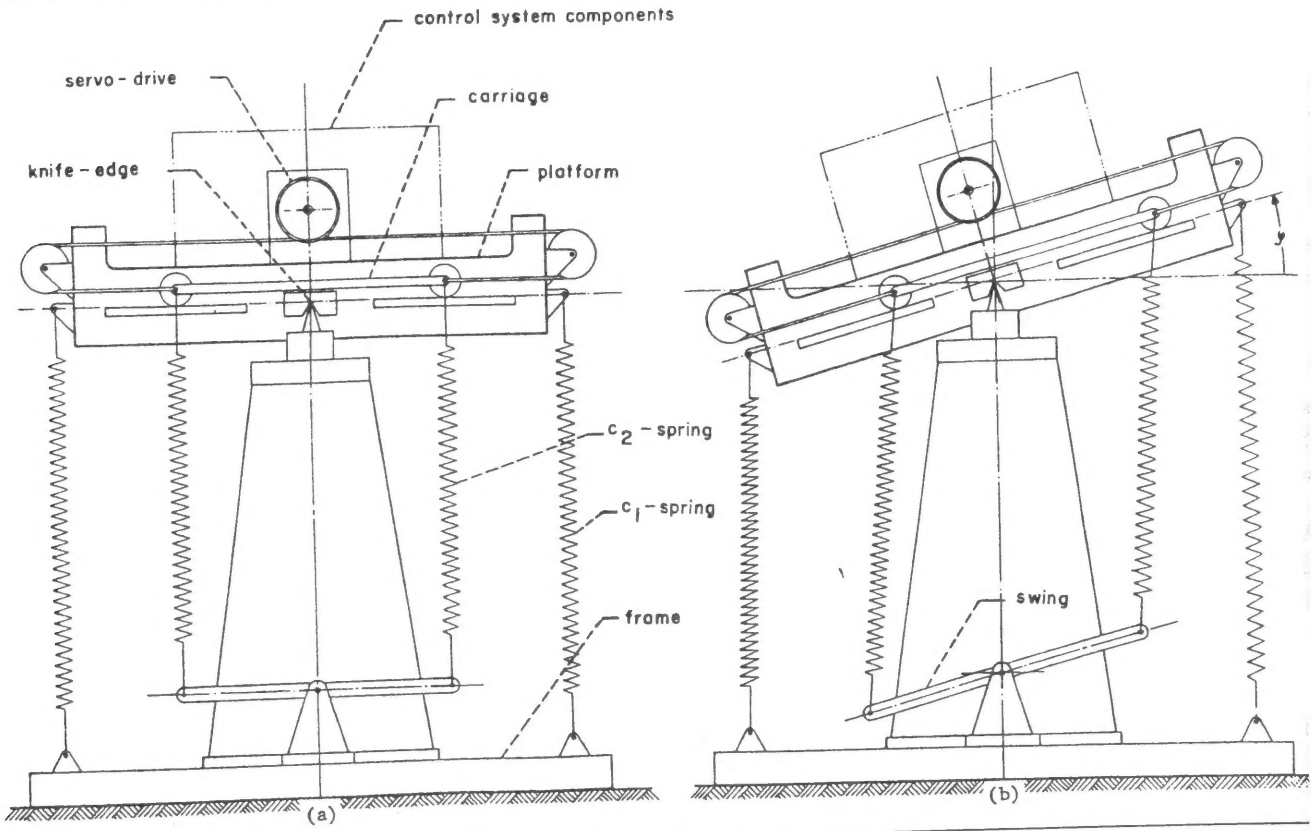

Figure 2. A one-axis mechanical simulator used in research at Peenemunde. Signals to the control system actuated servos that moved the platform. Measurements were made to ensure that the proper motion had been accomplished (from Hosenthien and Boehm 1962).

of receiver equipment and the man in the loop. Hoelzer was working on the radio control of aircraft with Telefunken in Berlin before coming to the research center at Peenemunde in 1939 as part of the civilian draft (Hoelzer 1983*a*). He, Otto Hirschler, Otto Hoberg, and others were assigned the job of making a radio guidance system for the A-4 (Haeussermann 1981). Later Hoelzer was put in charge of all guidance and control (Hoelzer 1983*b*).

In order to correct for lateral drift, it was necessary to obtain the lateral deviation from the flight path, the lateral velocity, and the integral of the deviation. In the attitude-control system, rate gyros were available and could be used to obtain the first derivative of the angle of flight, but in lateral guidance, nothing existed that could measure the lateral velocity. The lateral velocity could be calculated by integrating the lateral acceleration or by differentiating the lateral position deviation. The first method led to the later refinement of inertial guidance by Helmut Schlitt, a member of Hoelzer's group. The second was used by Hoelzer because he could see how his idea from 1935 for using a condenser could be applied to differentia tion (Hoelzer 1983*b*). The condenser could also b used as an integrator, returning the integral as generated voltage (Walther 1946). This electronic ar alog served as the heart of the radio guidance systen

With the lateral guidance problem largely solved b 1940, more attention was given to the attitude-contr system. Four companies (Askania, Kreiselgeraete, Ar schuetz, and Siemens) were involved in the compet tion to complete a system. When they requested mo time and money for the solution of several problen they were denied. In the meantime, Hoelzer had e tended the application of his electronic differentiato to the solution of the attitude-control problem. H was successful in obtaining the angular rate and a celeration proportional signal terms by differentiati the gyro attitude signal (Haeussermann 1981). Tl rate gyros were eliminated, and electronic networ were adopted for attitude control and lateral guidanc Hoelzer even used double differentiation in the fin version of the system because then he could elimina the position feedback of the vane servosystem (loss

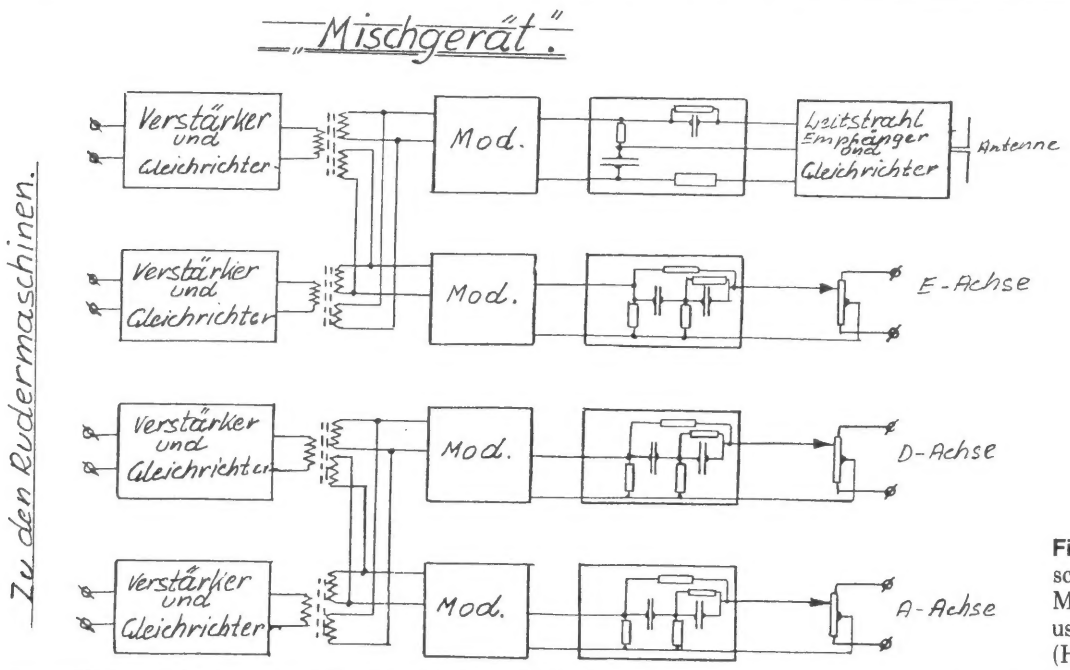

Figure 3. A schematic of the Mixing Computer used to guide the A-4 (Hoelzer 1946*b*).

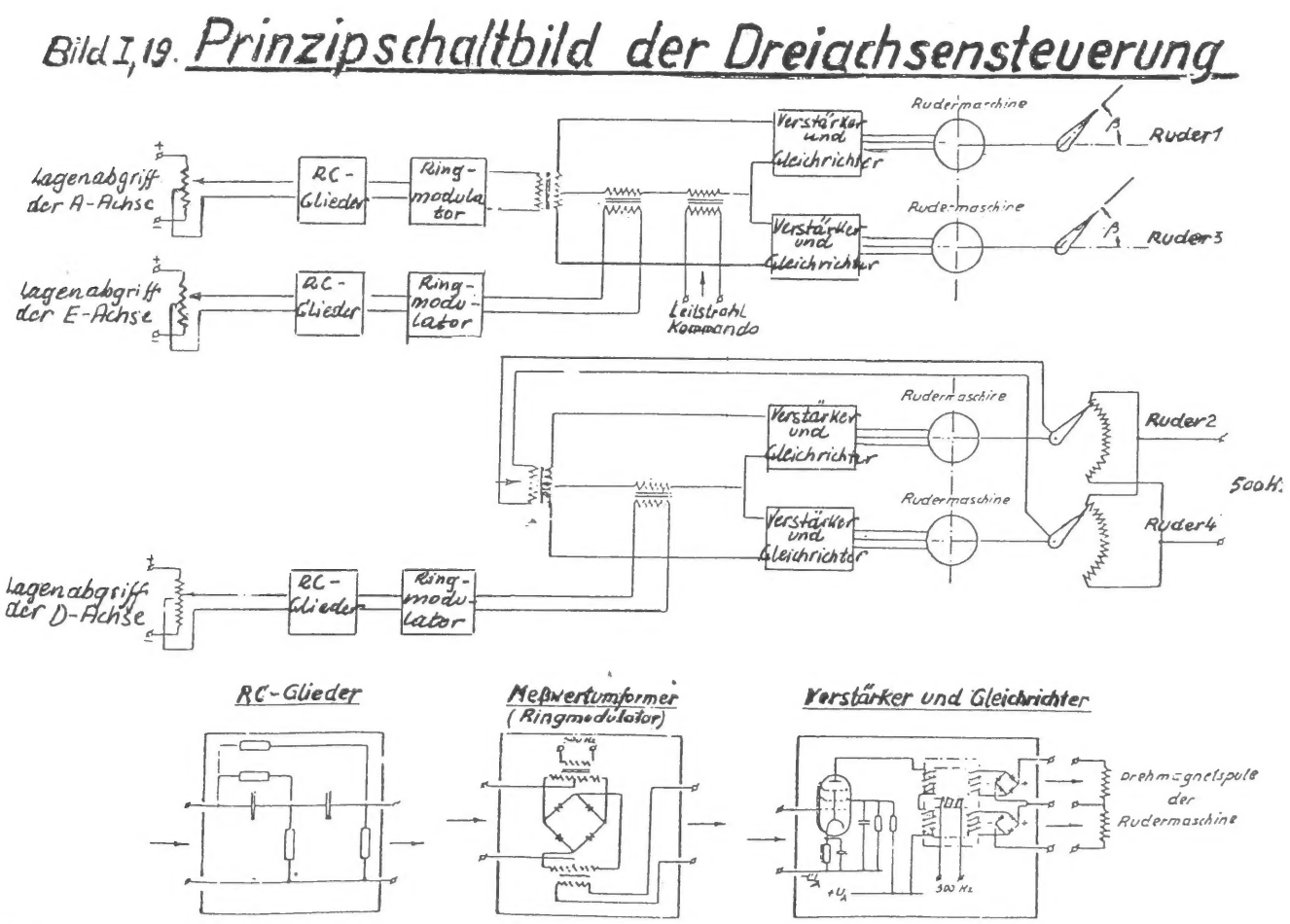

Figure 4. Principal diagram of the three-axis control system, including the Mixing Computer (Hoelzer 1946*b*).

were not compensated for in the double differentiating condenser circuit because it was unnecessary; Hoelzer 1983*b*). The combined system was called the *Mischgeraet* (Mixing Computer) and represented the first onboard electronic guidance computer ever constructed (Haeussermann 1981; Kirschstein 1950) (see Figures 3 and 4). From a practical standpoint, this breakthrough made mass production of the A-4 more economically feasible. The rate gyros cost approximately $7000. Their electronic replacement cost about $2.50 each! (Hoelzer 1983*a*) Thus Hoelzer's solution to the guidance and control problem fulfilled the two requirements of accuracy and capability for mass production. The next step was to take this special-purpose analog and adapt it for general use.

Second Application: The Fully Electronic Analog Computer

Hoelzer's second application of the concept of electronic networks was to the problem of simulations of the A-4. His work led to a true general-purpose analog computer. Hoelzer describes the evolution of his next step:

> Once one gets accustomed to the use of electronic circuits for the realization (the transformation of equations into hardware) of the guidance and control equations, it was easy to see for me that the same could be done for the equations of motion of the vehicle also. We have to find electronic [circuits] analogous of mechanical systems through their differential equations. If two different systems have the same equations they must have the same behavior because the equations have the same solution.
>
> This process was followed first for the motion of the A-4 rocket but soon I replaced it by the use of separate units for integration, differentiation, multiplication, division, square roots, functions of functions. . . .
>
> Using the differential equation as a kind of recipe for hooking these various units together and driving the setup with electrically generated excitation functions one can solve a large class of differential equations, which I did. Today this would be called analog computation. (Hoelzer 1983*b*)

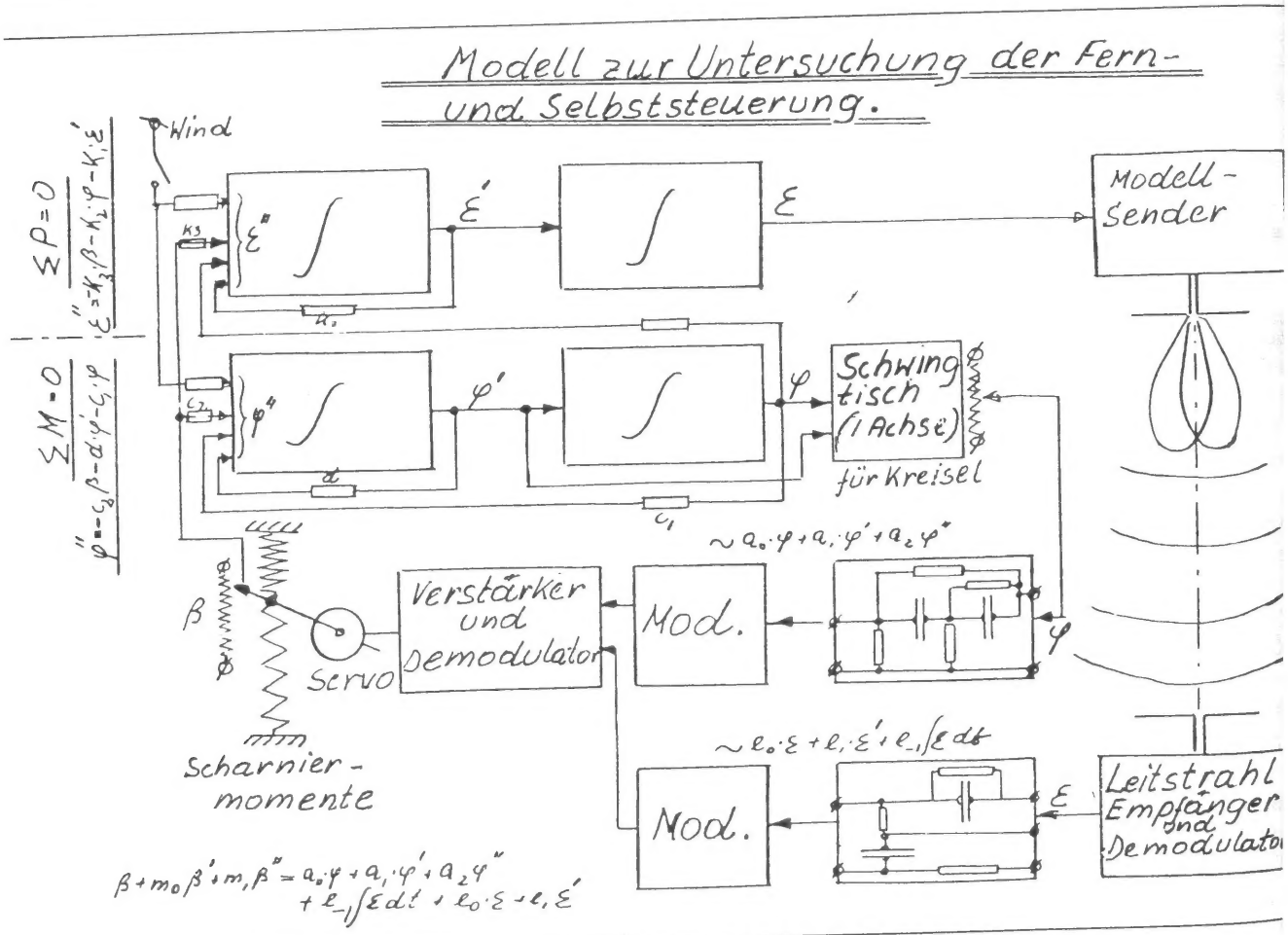

Figure 5. Diagram showing the simulation of two degrees of freedom: rotational yaw and lateral deviation (courtesy Helmut Hoelzer).

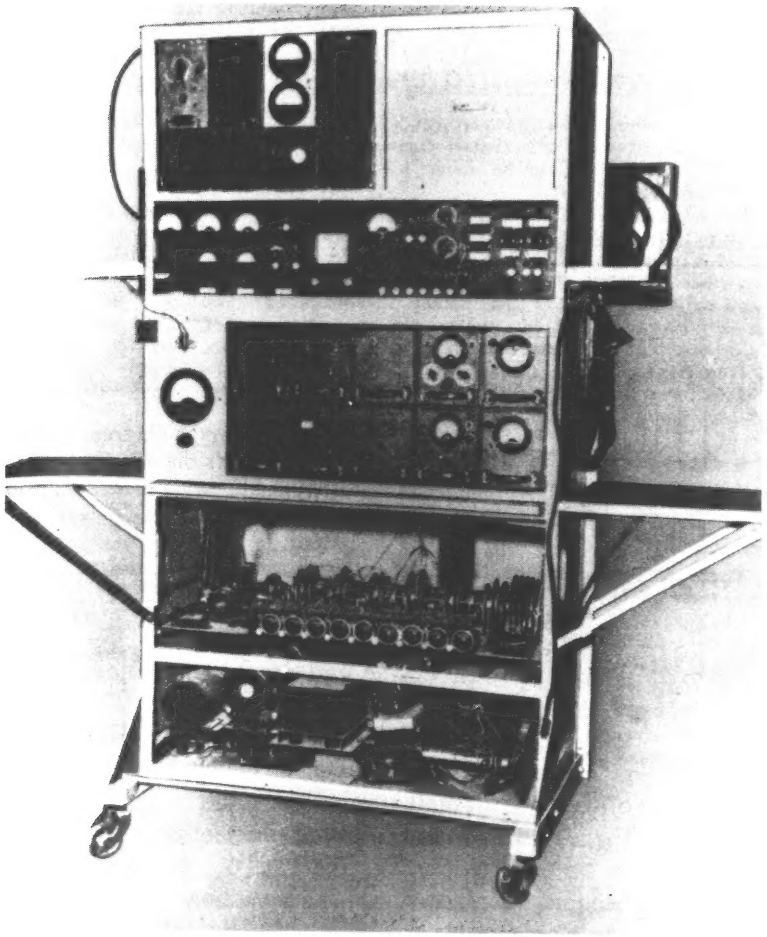

Figure 6. Hoelzer's electronic analog computer in its final form. The integrators, differentiators, and other calculating components were in the top segment. The segment below them contained cams that were used for simulating specific aspects of the vehicle. The bottom segment contained the power supply. The camshaft was driven by a vacuum cleaner motor (Hosenthien 1983; photo courtesy Jack Lucas, Marshall Space Flight Center).

This seemingly straightforward process actually followed a rocky road to realization. The need to simulate the guidance system of the A-4, both its attitude-control and lateral-control aspects, became obvious quite early. Neither the A-4 nor its immediate predecessor the A-5 had what would today be considered outstanding test records. Reel after reel of archive film shows spectacular, often explosive, malfunctions both in the mechanical parts of the vehicles and in the control systems. This trouble was to be expected in part because the German rocket team was the first to work with truly large-scale liquid-fuel engines. They were essentially doing the basic research necessary to understand such beasts hand-in-hand with what is called applications work. Obviously, not much can be learned about a failing control system during the few seconds of frustration while the rocket is tumbling end-over-end into the Baltic. It was necessary to find a method to test the system under realistic conditions on the ground.

One of the first solutions to the attitude test problem was to construct a framework that could hold an entire attitude-control system. It was suspended on knife edges with a servodrive mounted on top of the part being balanced to cause motion proportional to the movement of vanes on the actual rocket (see Figure 2). This all-mechanical simulator turned out to be too crude. When Hoelzer replaced the rate gyro on the A-4 by an electrical device, it became possible to build an attitude-control loop simulator using a pendulum (Haeussermann 1981). This electromechanical simulator was constructed by Walter Haeussermann in 1939 (Hosenthien and Boehm 1962). The device proved to be unsatisfactory for testing all aspects of the guidance and control system, particularly the beam rider portion (Hirschler 1983).

At this point Hoelzer began to apply his electronic devices to simulating the vehicle and to solving the equations of motion (see Figure 5). It was also at this point that serious opposition developed to his ideas. Even though Hermann Steuding, then head of the ballistic and aerodynamic department of the rocket laboratory, had suggested the laboratory simulation of the rocket that led to the mechanical simulator

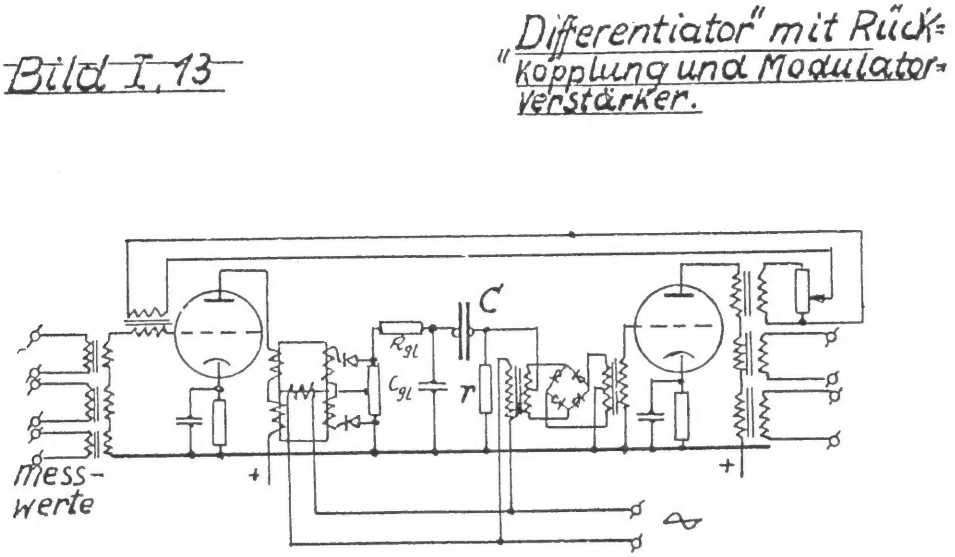

Figure 7. Circuit diagram taken from Hoelzer's dissertation of a differentiator with feedback. No the ring modulator (Hoelzer 1946*a*).

(Haeussermann 1981), he was vociferously opposed to electronic solutions to equations of motion. At the time, Steuding had human computers for doing the mathematical calculations needed for the development program. When Hoelzer presented his analog computer concepts, Steuding said: "Young man, when I compute something, the results will be correct and I do not need a machine to verify it. By the way, machines cannot do this" (Hoelzer 1983*b*). Steuding was considerably older and thus somewhat imposing to the young engineers. Hoelzer did not approach him again. Von Braun also joined the opposition, telling Hoelzer that if he needed something computed, he should go to Steuding, and should "quit playing wi electronic toys."

Despite the objections of his superiors, Hoelzer d cided to go ahead and build the device. Behind h office was a small room that could only be reach through a door in the office. The room was suppos to be used to test instruments of various sorts a became the place where the breadboard version of t analog computer was built. Otto Hirschler, an engine in the laboratory, was recruited to do most of t wiring. Only he and Hoelzer had access to the roo Hirschler thought that the reason for secrecy w Reichsfuehrer Hermann Goering's general restrictio

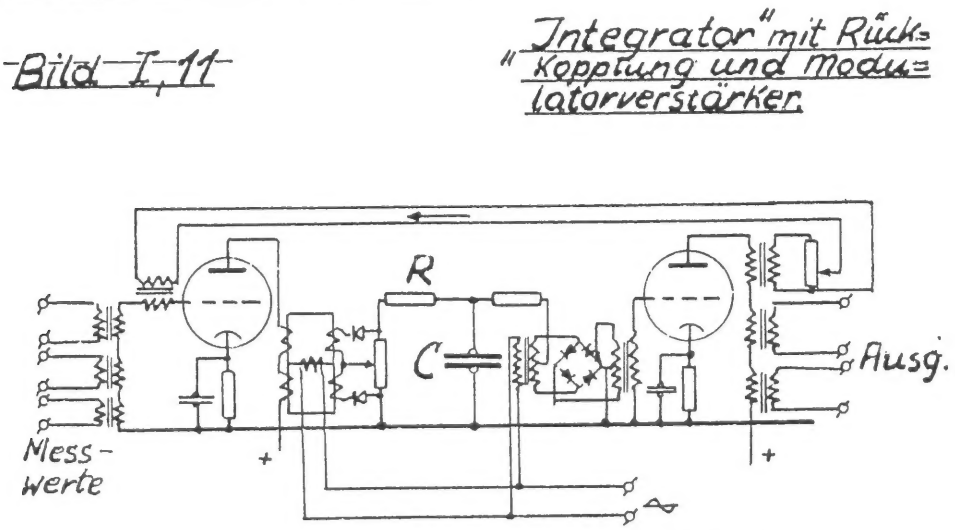

Figure 8. Circuit diagram of a integrator with feedback (Hoe 1946*a*).

Bild I, 14

Zur theoretischen Behandlung des Differentiators.

$k=0$; V beliebig: $u_2 = Vr(u_1 - r(u_2$ mit $V \gg 1$ u. $r \ll 1$.
$V=1$, k " : $u_2 = r(u_1 + r(k-1)u_2$
$= r(u_1$ bei $k=1$

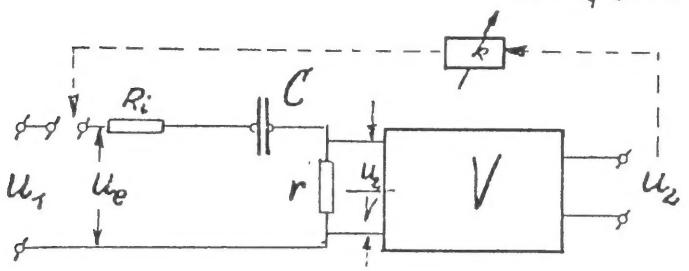

Bild I, 15

Zur theoretischen Behandlung des Integrators.

$k=0$; V beliebig: $u_2 = \frac{V}{RC}\int u_1 dt - \frac{1}{RC}\int u_2 dt$ mit $V \gg 1$; $\frac{1}{VRC} \ll 1$
$V=1$, k " : $u_2 = \frac{1}{RC}\int u_1 dt - \frac{k-1}{RC}\int u_2 dt$
$= \frac{1}{RC}\int u_1 dt$ bei $k=1$.

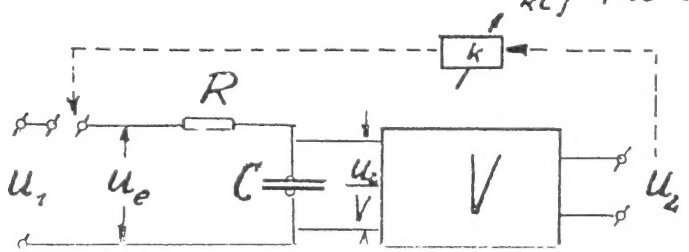

Figure 9. Diagrams showing the effects of feedback (Hoelzer 1946*a*).

Bild II, 5.

Schaltschema zur Bildung des Ausdrucks
$y = a(t) \cdot b(t)$

bezw.
$y = [a(t)]^2$

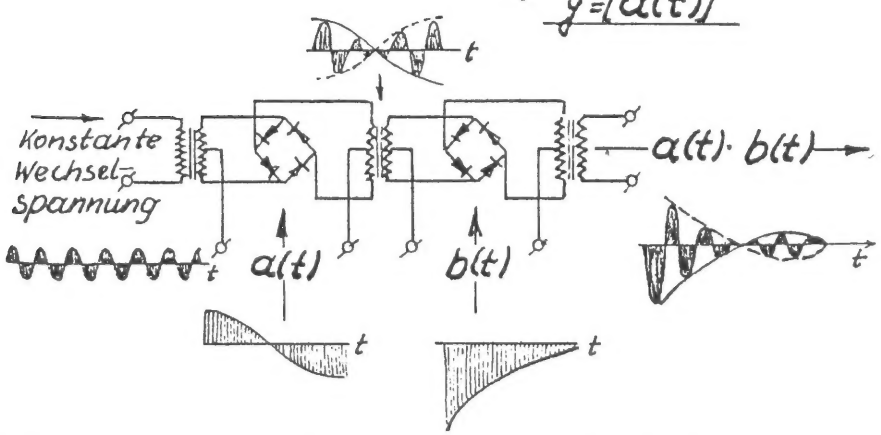

Figure 10. Multiplication circuit using ring modulators (Hoelzer 1946*a*).

against all new applications research (Hirschler 1983). Even though the real opposition was probably closer to home, the spector of Goering helped him keep the secret.

The breadboard version of the computer was completed in 1941 (Hosenthien and Boehm 1962). During the several weeks of construction time, Ernst A. Steinhoff, director of the guidance control and on-board instrumentation group, had conveniently "shut both eyes" to what was going on in the back room (Hoelzer 1983*b*). When the first version was completed, it was demonstrated for Steinhoff, who then set up a similar show for von Braun and Dornberger (Hirschler 1983). The latter is mentioned in Dornberger's book on the V-2 (Dornberger 1954). As a result of the successful demonstrations, Hoelzer was told to go ahead and have Hirschler put the device into a functional package (see Figure 6). Two were eventually constructed (one later found its way to the United States) (Hosenthien 1983). Rudolph Hoelker was brought in to do the math and run the machine in its operational phase (Hirschler 1983).

The following characteristics of the machine were unique to its time.

1. The employment of positive feedback to compensate for losses in the condensers and the resistances of the circuit, resulting in "an almost ideal integrator" (Haeussermann 1981; see Figures 7, 8 and 9).

2. The incorporation of AC amplifiers instead of DC amplifiers, creating an absolutely stable system. The signals were suppressed-carrier (500 hertz) amplitude-modulated ones that were demodulated before integration and remodulated afterward (Hoelzer 1976).

3. The first integrator or differentiator with impendances in the feedback line only, with nothing but the amplifier in the forward line of the circuit (Hoelzer 1946*a*).

4. The application of ring modulators as multiplication devices (Hoelzer 1976; see Figure 10).

5. The inclusion of division and square root circuits with and without integrators (Hoelzer 1976; see Figures 11 and 12)

These characteristics enabled the computer to create the first complete simulation of the A-4 in two degrees of freedom, both rotational yaw and lateral motion. Thus the mechanical simulators were eliminated, and a fully electronic analog computer came into constant service.

Documenting the Design: The First Dissertation in the Electronic Computer Field

While the computer was being built, Hoelzer was carefully documenting its design characteristics to use as the basis for his dissertation. This dissertation had an even more difficult time coming to fruition than the machine. First completed in 1941, it was immediately classified, so Hoelzer was unable to submit it to Darmstadt. That version was destroyed in the British bombing raid on Peenemunde on the night of August 18, 1943. A second version was captured by Americans in January 1945, but Hoelzer got it back later in the year (Petzold 1982). He completed the second version in the fall of 1945 and submitted it to the Technical University at Darmstadt in January 1946. The commissioner appointed by the military government to oversee the university, a U.S. Army captain, rejected it on the grounds that it contained "weapon development" (Hoelzer 1983*a*; 1983*b*). He ordered that all mention of application to rockets be eliminated because, "This was the last war. We will have peace from now on."

Walther suggested a way to get around the captain's objections: split the dissertation into two parts (Petzold 1982). Hoelzer accordingly prepared a third version of his dissertation. The first part (Hoelzer 1946*a*) contains only a description of the computer. The second (Hoelzer 1946*b*) contains the design of the guidance and control system as well as the simulation setup using the analog computer parts. Hoelzer was given an oral exam in the presence of the military superintendent based on the first part, which he passed. Another oral exam was held later on the second part, attended only by the faculty. On February 11, 1946, Hoelzer was awarded the degree of doctor of engineering. The dissertation is significant because it represents the first doctorate awarded for work in electronic computer science.

The Next Generation

The success of the analog computer at Peenemunde caused its use to be continued in the United States. In 1946 the members of the von Braun team that had surrendered to the Americans had been established at Fort Bliss, Texas, to continue their research under U.S. Army auspices. One of the two analog computers built during the war had also made the journey. It was pressed into service in development work on the Hermes rocket (Hosenthien 1983). Soon it became apparent that a better version of the computer was both possible and desirable. Von Braun ordered the construction of a new analog computer using the same basic principles. This second-generation machine was completed in 1950 and had increased flexibility compared with the earlier device (Haeussermann 1981). It was in service for a decade, helping in the simulation of the Redstone and Jupiter rockets and the comb

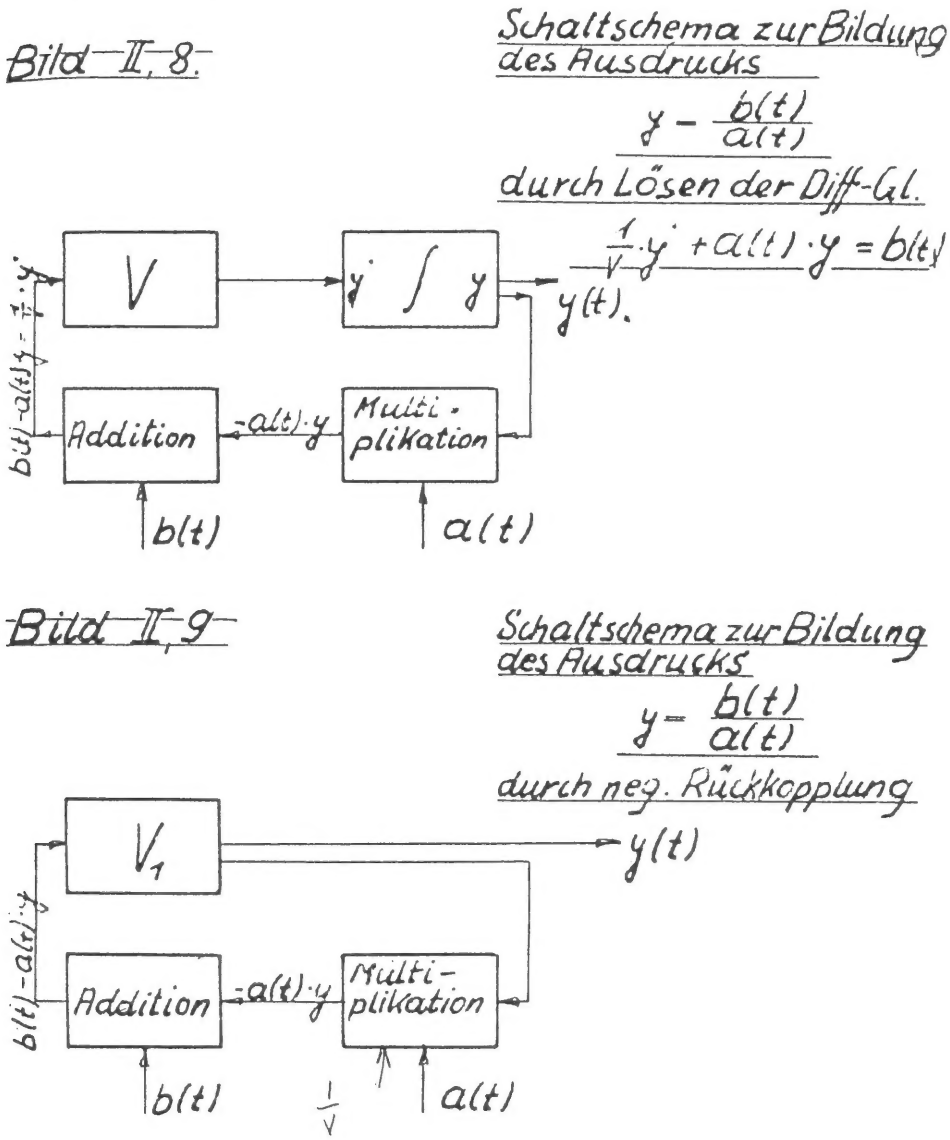

Figure 11. Two versions of the division circuit (Hoelzer 1946*a*).

nation booster that sent Explorer I into orbit. When Hans Hosenthien and Hirschler were building the second-generation machine, they cannibalized the first for parts, so some portions of the original computer were in active life for nearly 20 years. AC amplifier computers, mostly built after World War II, were phased out in the 1950s after the drift-free DC amplifier was developed. Both the Pershing I and the Saturn vehicles were built with the help of DC analog computers.

Meanwhile, Hoelzer had begun to build a career in the digital computer field. He came to the United States in May 1946. By August he was at Fort Bliss, occasionally commuting to White Sands for firings with the rest of the von Braun group. In 1948 he was loaned to the Air Force and assigned to Holloman Air Force Base in New Mexico. There he worked in a computation laboratory containing IBM card-programmable computers and, ironically, a GEDA analog computer. In 1952 he rejoined the von Braun team, which by then had migrated to the Redstone Arsenal in Huntsville, Alabama. He helped set up and then directed the Computation Laboratory there until his retirement from NASA in 1973. While director he devised a distributed computing plan for the various laboratories and enforced standards of hardware/software compatibility that would be the envy of present-day corporate computation centers wrestling with

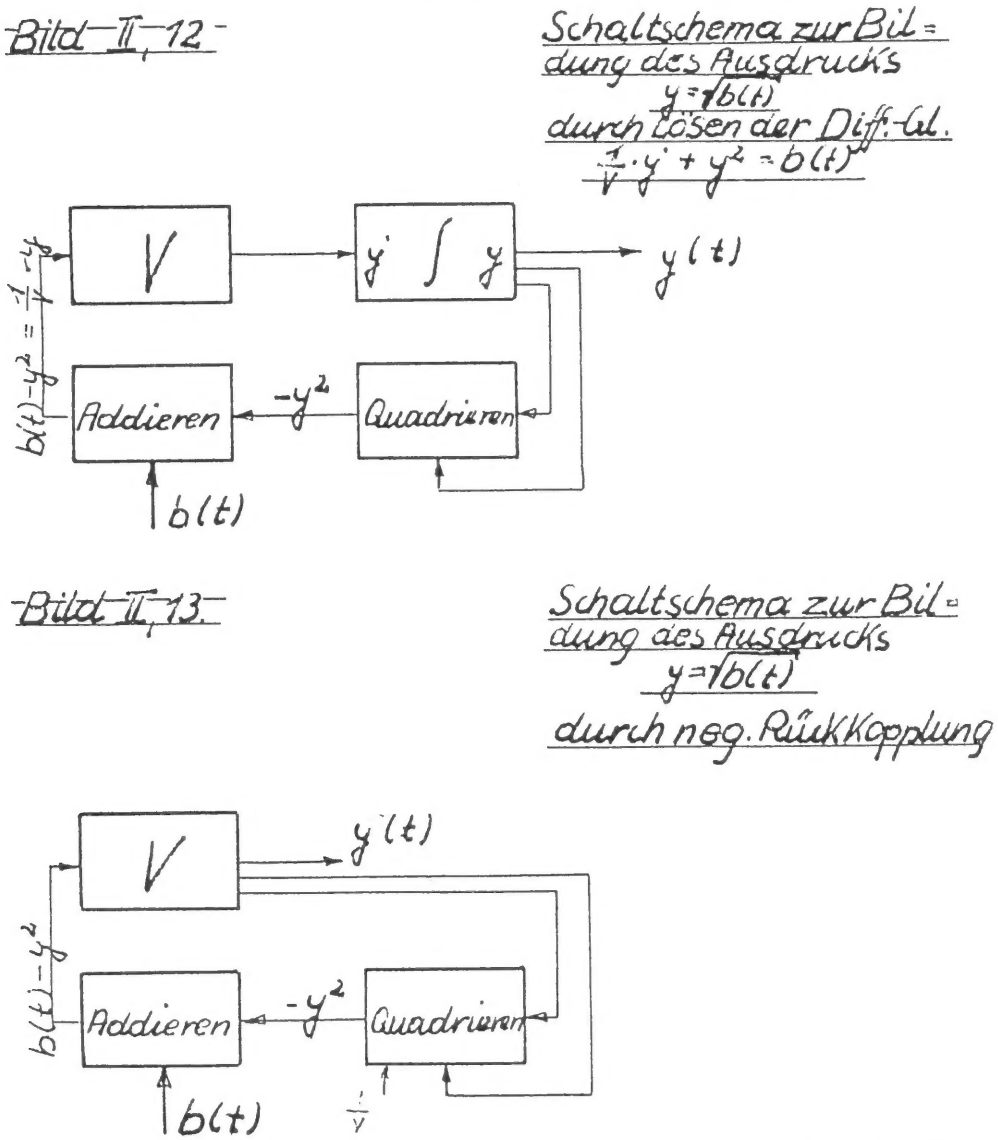

Figure 12. Two versions o the square root circuit (Hoelzer 1946*a*).

end-user computing. At one time he had more than 100 mainframe and minicomputers under his supervision. His lab took delivery on one of the first of the IBM 704s and the first of the 7090 series. The Marshall Space Flight Center was a pioneer in the placement of minicomputers in laboratories for distributed computing. From the beginning of 1974 to the end of 1976, Hoelzer was a consultant to the European Space Agency on software engineering for the Spacelab that is carried in the Shuttle's cargo bay. He helped formulate a plan for both on-board and ground software and participated in procurement and personnel decisions. In 1977 he served as a consultant to the Tennessee Valley Authority and since has enjoyed retirement atop Monte Sano in Huntsville.

Summary: A Technology of Rocket Development

Helmut Hoelzer's analog computer occupies a plac not only in the history of computing, but also in th genesis of a technology of rocket development. It i fairly obvious from the evidence that Hoelzer designe and built his computer as part of an ongoing menta process from 1935 to 1941 in which he applied th concept of using a condenser for integration and di ferentiation with a feedback circuit to compensate fo losses. He was aware of Harry Nyquist's work at Be Laboratories on feedback (it is cited in his dissertat tion), and this helped him in formulating his origina idea for the absolute-velocity computer. His only cor temporary in the electronic analog field was Philbrick

who built a hard-wired special-purpose machine for modeling process-control loops. The basic components designed by Hoelzer were found in the A-4 guidance system and in a computer that solved a wide variety of equations. Research on a machine of similar power and flexibility did not begin in the Allied countries until 1942 or later, and results equal to Hoelzer's machine were not produced until the immediate postwar years.

Hoelzer's analog computer can claim a wider place in the history of technology because it was the centerpiece of an emerging technique of rocket design. Rocket construction and testing in the 1920s and 1930s was a painfully slow and frustrating process marked by explosions that often destroyed the reasons for failure. Simulation techniques and their incorporation into rocket development on a permanent basis are part of the basic research results of von Braun's rocket team. This technology was later applied to a series of large-scale rockets built in the United States. Perhaps the culmination and final justification of the techniques is the flight record of the Saturn I vehicle, the first large liquid-propellant cluster booster. In ten flights, it scored ten unqualified successes. The Saturn was the most simulated rocket of its time, using the new DC analog computers and the IBM 7090. In addition to simulations, the concept of an on-board computer is critical to the guidance and control of rocket vehicles. These computers have been generally digital in nature since the late 1950s.

The idea spawned in a glider over Germany in 1935 led to one of the first of the general-purpose electronic analog computers, and also to the techniques that made it possible to fly in stranger atmospheres. Not many people in the Germany of his time were willing to go against the system, but Helmut Hoelzer, like other inventors before and since, could only see the fruits of going ahead, not the objections of others. This is why the history of machines continues to be a human story, despite its apparent emphasis on nonhuman results; conviction and dedication are still solely the province of the inventor, not of the invented.

Acknowledgments

Some of the research used in this article was conducted under NASA contract NASW-3714. Austin Melton, assistant professor of computer science at Kansas State University, helped in translating some German source material. Dana Hamit read and commented on early versions. My deep thanks to all the gentlemen from Peenemunde cited in the references for granting interviews and sharing their writings with me.

REFERENCES

Bush, Vannevar. 1931. The Differential Analyzer, a new machine for solving differential equations. *J. Franklin Institute 212*, 447.

Dornberger, Walter. 1958. *V-2.* Trans. James Cleugh and Geoffrey Halliday. New York, Viking Press, 1958.

Giloi, W. K. n.d. *Principles of Continuous System Simulation.* Teubner Studienbucher Informatik.

Haeussermann, Walter. May–June 1981. Developments in the field of automatic guidance and control of rockets. *Guidance and Control 4*, 3, 225–239.

Haeussermann, Walter. September 12, 1983. Telephone interview with the author.

Hirschler, Otto. September 12, 1983. Telephone interview with the author.

Hoelzer, Helmut. 1946*a*. *Anwendung elektrischer Netzwerke zur Losung von Differentialgleichungen und zur Stabilisierung von Regelvorgangen (The Application of Electrical Networks to the Solution of Differential Equations and to the Stabilization of Control Systems).* Dissertation #D.87, Technical University, Darmstadt.

Hoelzer, Helmut. 1946*b*. *Anwendung elektrischer Netzwerke zur Stabilisierung von Regelvorgangen und zur Losung von Differentialgleichungen, gezeigt an der Stabilisierung der Fluger einer selbst-bezw. ferngesteuerten Grossrakete (Application of Electrical Networks to the Stabilization of Regulating Processes and to the Solution of Differential Equations, Demonstrated on the Stabilization of the Flight of an Automatically Controlled, Respectively Guided Large Scale Rocket).* Darmstadt.

Hoelzer, Helmut. 1976. Remarks at a Guidance and Control Symposium, in Ernst A. Steinhoff (ed.), *The Eagle Has Returned.* Vol. 43, Science and Technology Series, American Astronautical Society, pp. 301–316. [*Author's Note:* Hoelzer has informed me that this publication contains several errors in both text and figures as compared with his manuscript.]

Hoelzer, Helmut. June 24, 1983*a*. Interview with the author, Huntsville, Alabama.

Hoelzer, Helmut. October 5, 1983*b*. Letter to the author.

Holst, P. A. September 1971. A Note of History. *Simulation 17*, 3, 131–135.

Holst, Per A. April 1982. George A. Philbrick and Polyphemus. *Annals of the History of Computing*, Vol. 4, No. 2, pp. 143–156.

Hosenthien, Hans, and Josef Boehm. March 23, 1962. Flight simulation of rockets and spacecraft. *From Peenemunde to Outer Space,* Huntsville, NASA Marshall Space Flight Center, pp. 437–469.

Hosenthien, Hans. September 12, 1983. Telephone interview with the author.

Jackson, Albert S. 1960. *Analog Computation.* New York, McGraw-Hill.

Jenness, Roger R. 1965. *Analog Computation and Simulation: Laboratory Approach.* Boston, Allyn and Bacon.

Johnson, Clarence. 1963. *Analog Computer Techniques.* New York, McGraw-Hill.

Kirschstein, F. May 22, 1950. Elektrotechnisches von der V-2. *Electrotechnische Zeitschrift,* 281–287.

Ordway, Frederick I. III, and Mitchell R. Sharpe. 1979. *The Rocket Team.* New York, Crowell.

Petzold, Hartmut. 1982. *Geschichte der Herstellung und Anwendung rechnender Maschinen und Gerate im Deutschen Reich und der Bundersrepublik Deutschland bis 1968.* Unpublished dissertation.

Roedel, J. 1955. "An Introduction to Analog Computers." In H. M. Paynter (ed.), *A Palimpsest on the Electronic Analog Art.* Boston, George A. Philbrick Researches, pp. 27–47.

Steinhoff, Ernst A. 1973. *Weltraumfahrt.* Darmstadt, Carl Habel.

Steinhoff, Ernst A. 1974. "Early Developments in Rocket and Spacecraft Performance, Guidance and Instrumentation." In F. Durant and G. James, *First Steps in Space,* Washington, Smithsonian Institution, pp. 277–285.

Thomson, W. (Lord Kelvin). 1875*a*. Mechanical Integration of linear differential equations of the second order with variable coefficients. *Proc. Royal Society 24,* 269–271.

Thomson, W. (Lord Kelvin). 1875*b*. Mechanical integration of linear differential equations of any order with variable coefficients. *Proc. Royal Society 24,* 271–275.

Tomovic, Rajko, and Walter J. Karplus. 1962. *High-Speed Analog Computers.* New York, Wiley.

Walther, Alwin. 1946. "Wechselwirkungen Zwischen Mathematik und Technik." In *Die Welt des Ingenieurs,* Heidelberg and Darmstadt, Carl Winter.

Weyrick, Robert C. 1969. *Fundamentals of Analog Computation.* Englewood Cliffs, N.J., Prentice-Hall.